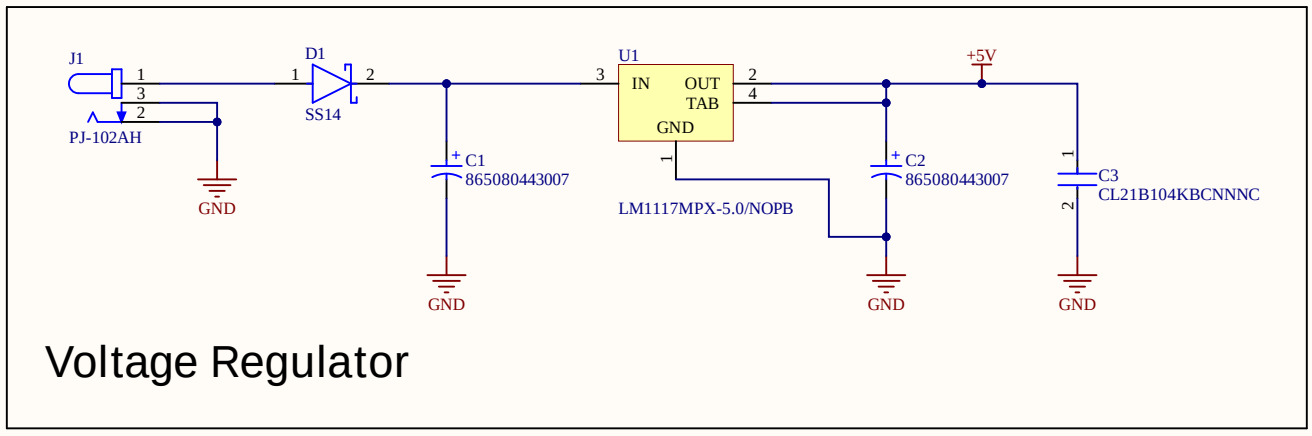

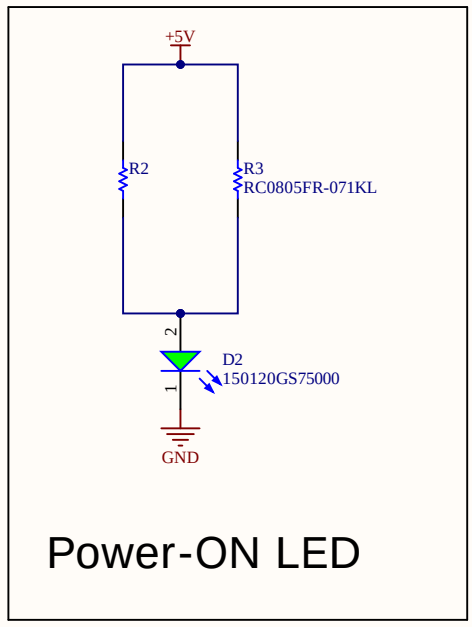

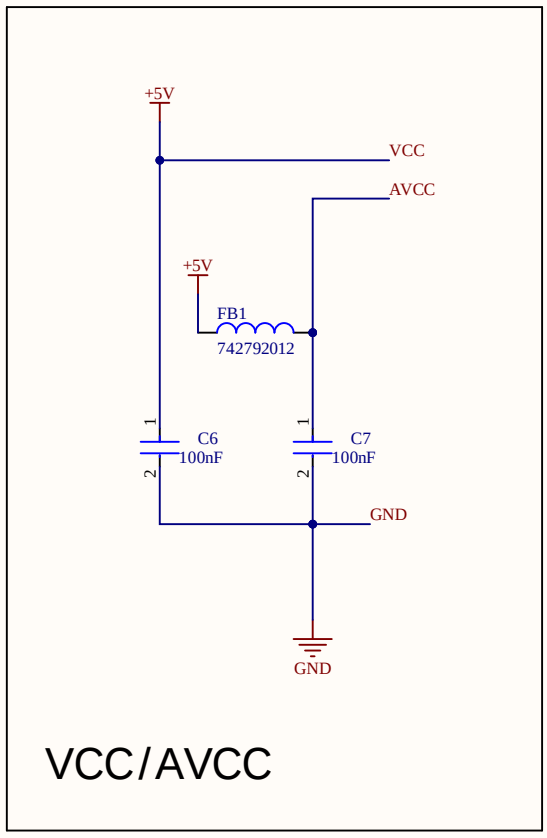

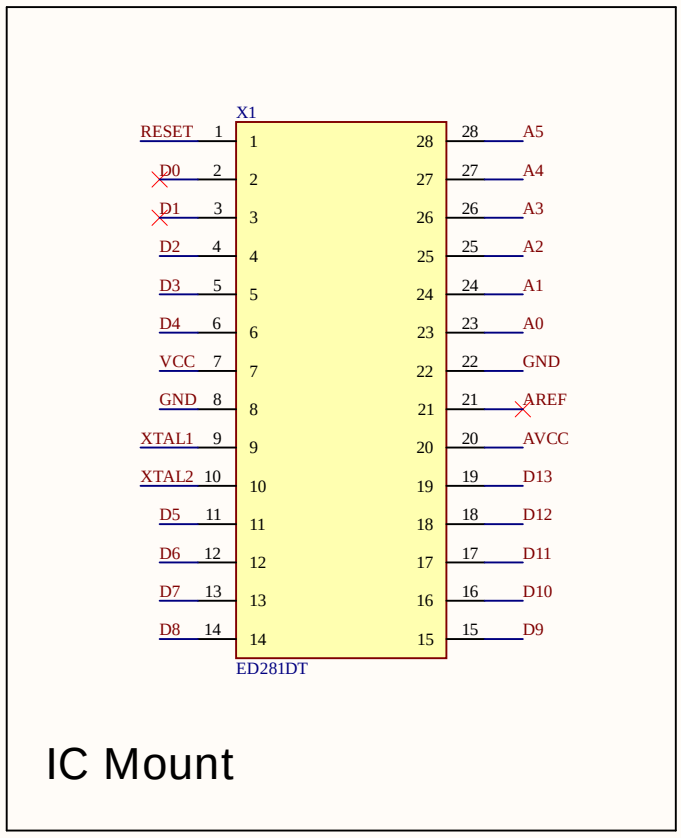

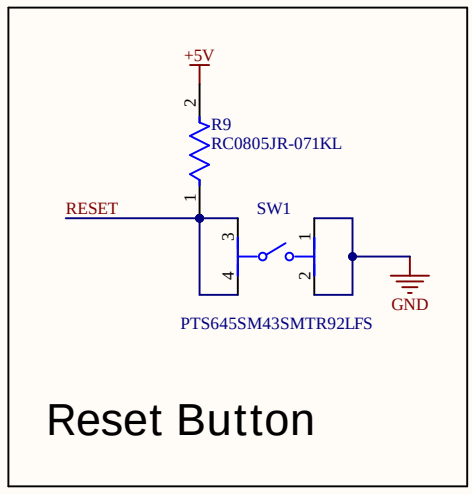

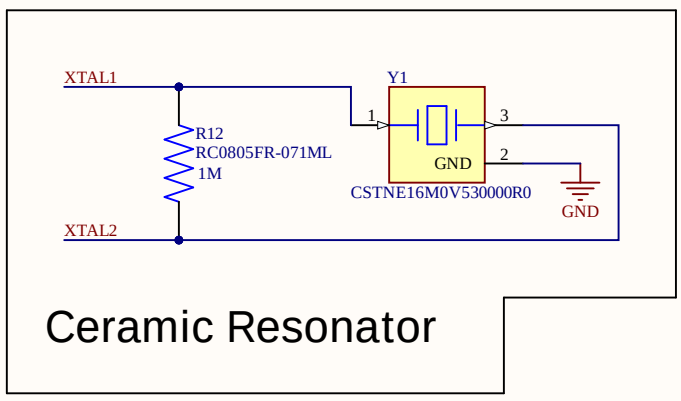

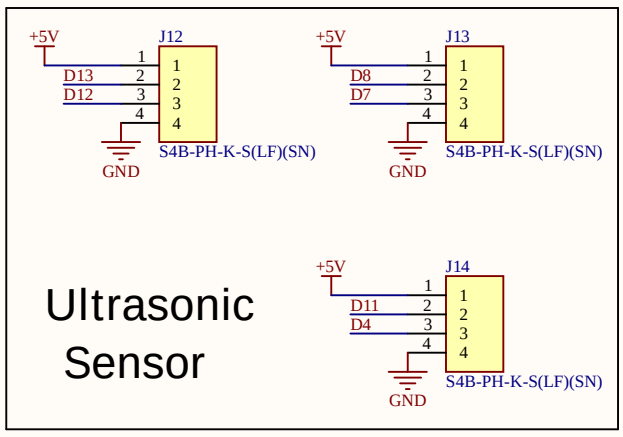

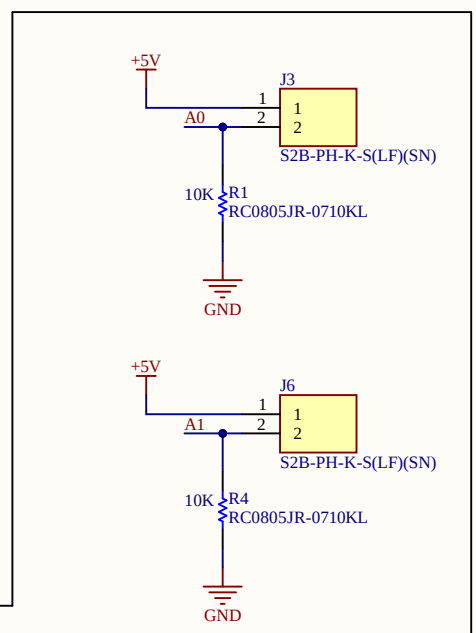

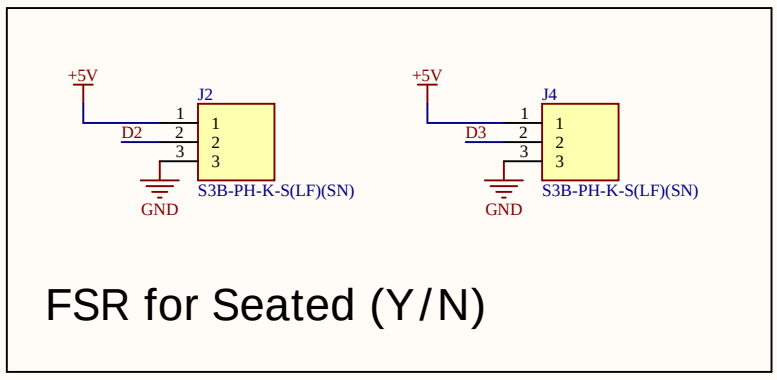

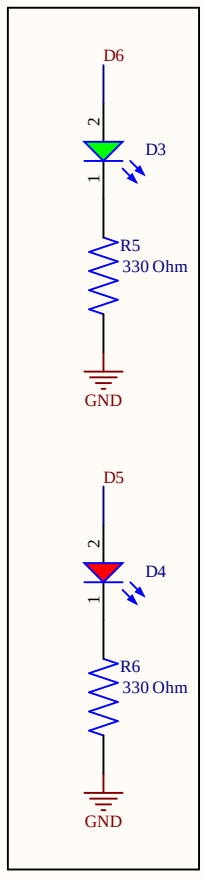

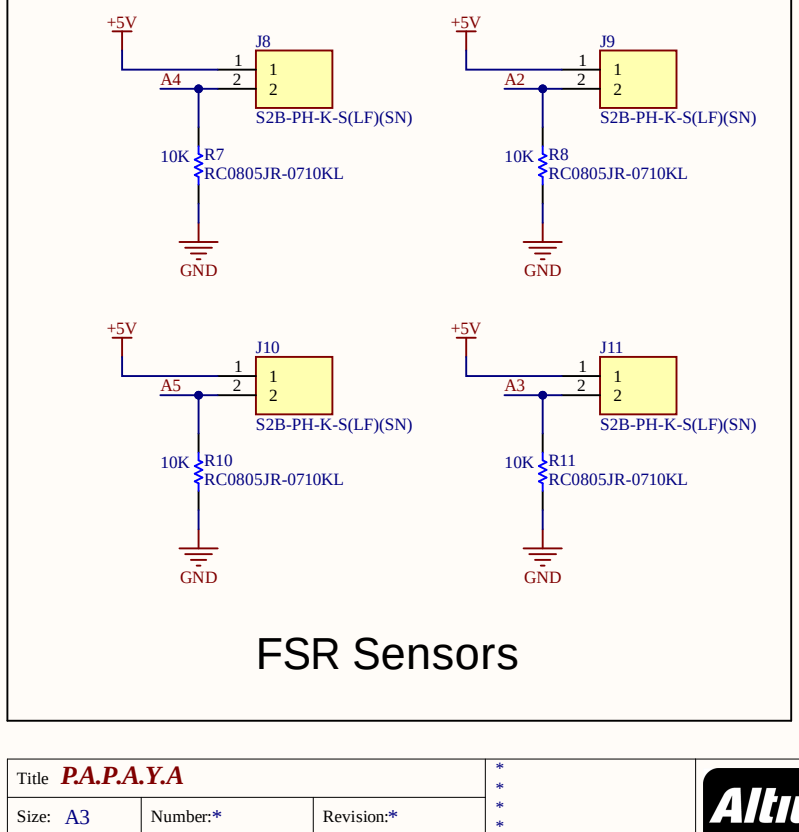

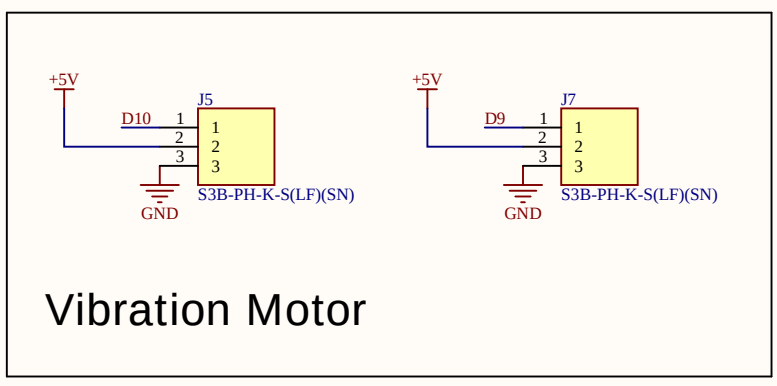

Title P.A.P.A.Y.A		
Size: A3	Number:*	Revision:*
Date: 5/17/2025	Time: 3:26:22 PM	Sheet 1 of 1
File: Papaya_pcb_scematic_2.SchDoc		